Artitec®

Hansa LLoyd Merkur

10.380

Kleuren / Farben / colors:
H = Humbrol
R = Revell
****** = a lot
* = a little

OW - Off White
• H34****** + H33* + H24*
• R5****** + R8* + R15*
BK - Black
• H33 / R8
YW - Yellow
• H24 / R15
AT - Anthracite
• H33*** + H34*
• R9****** + R5*
SV - Silver
• H11 / R191
WT - White
• H34 / R5
BG - Bright Green
• H101 / R364
SD - Sand
• H63*+103*** / R16
NW - Natural Wood
• H110 / R86

• Mengverhoudingen:
*** = veel / viel / much
** = evenveel / gleich / equal
* = weinig / wenig / a little

• Lijm resin en messing onderdelen met secondelijm (cyanoacrylaat).
• Zum verkleben verwenden Sie Cyanoacrylate.
• Glue resin and brass parts with Cyanoacrylate.

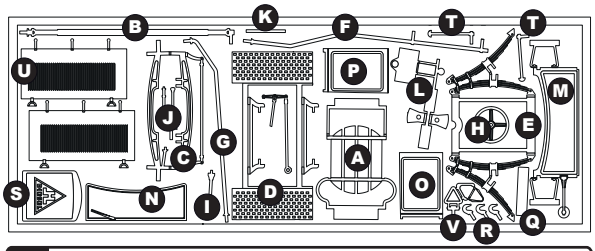

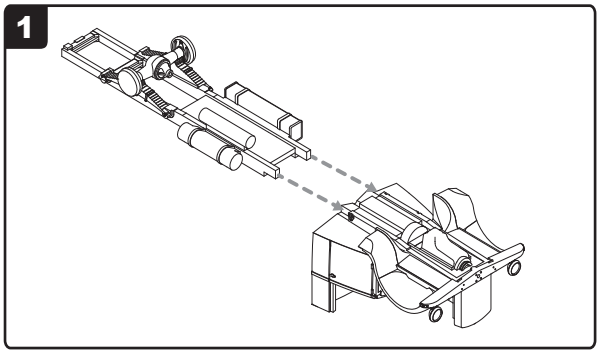

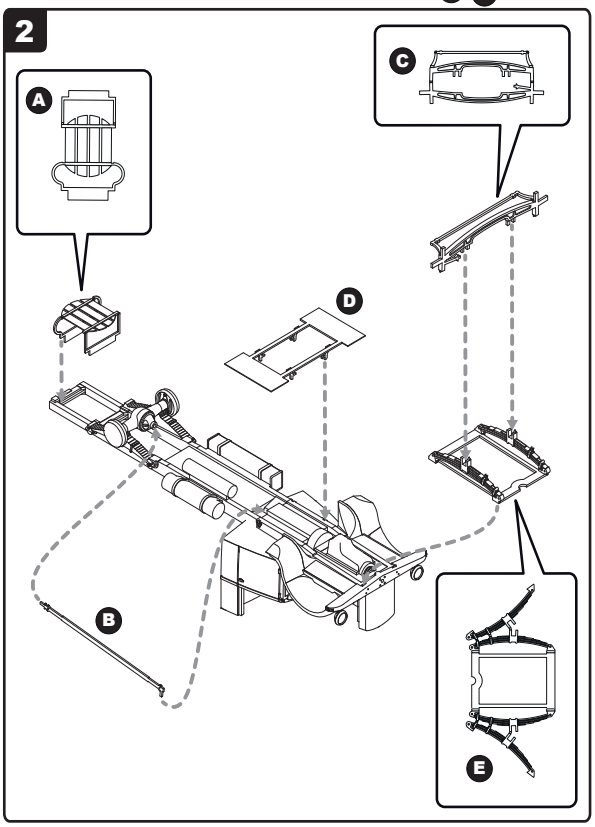

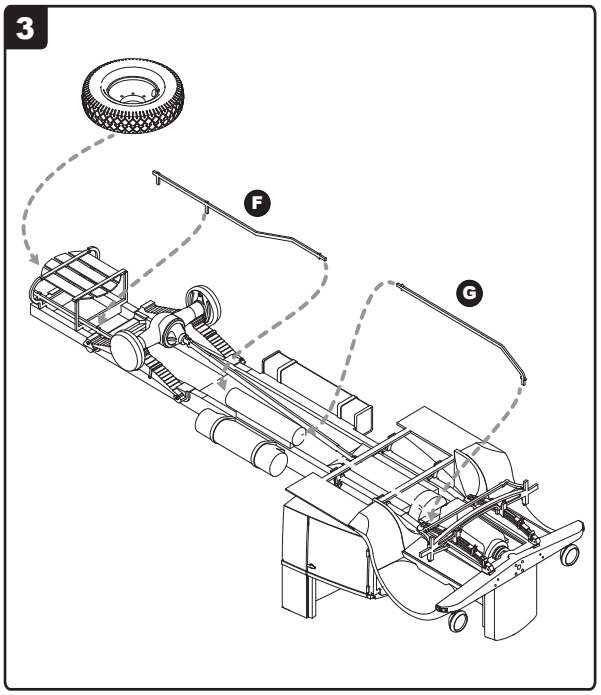

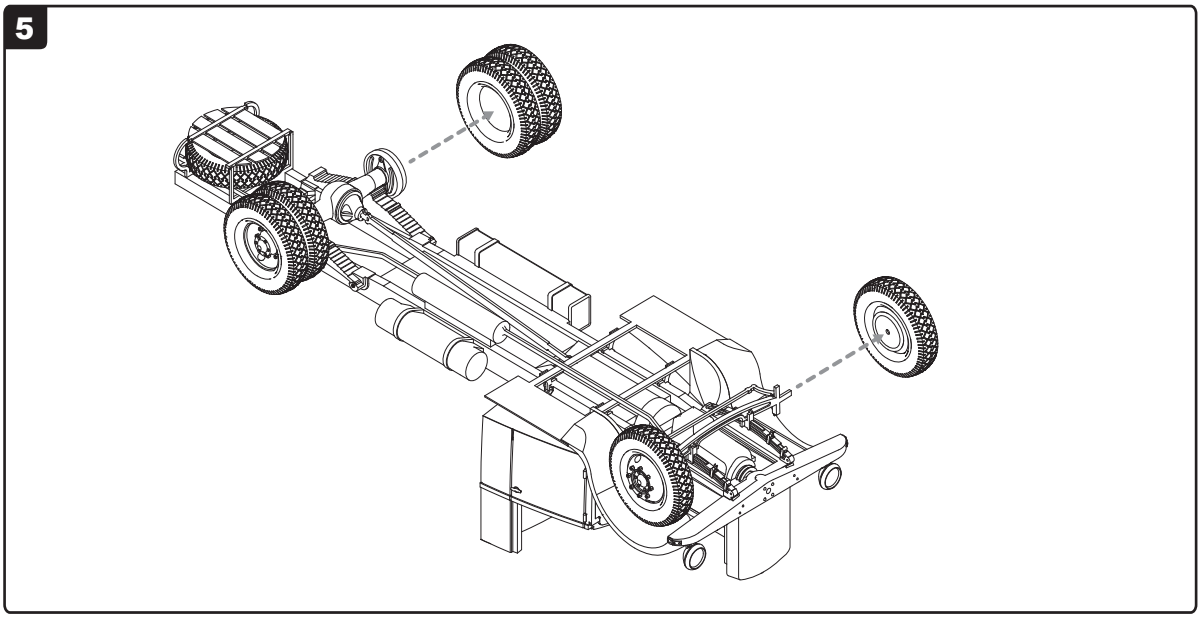

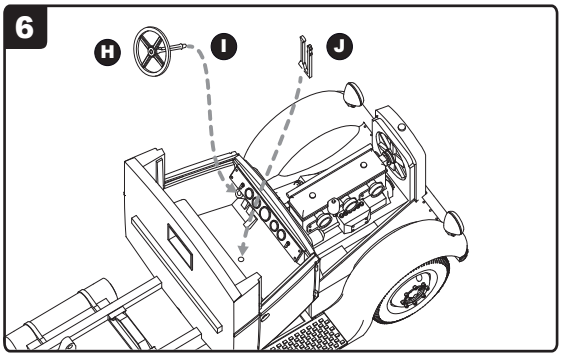

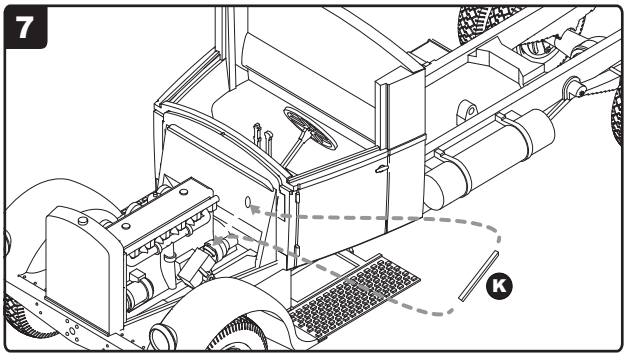

8

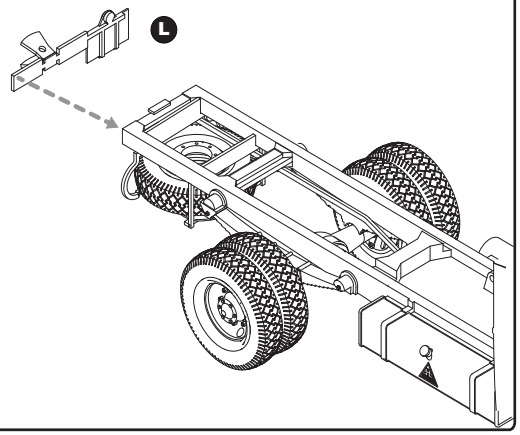

9

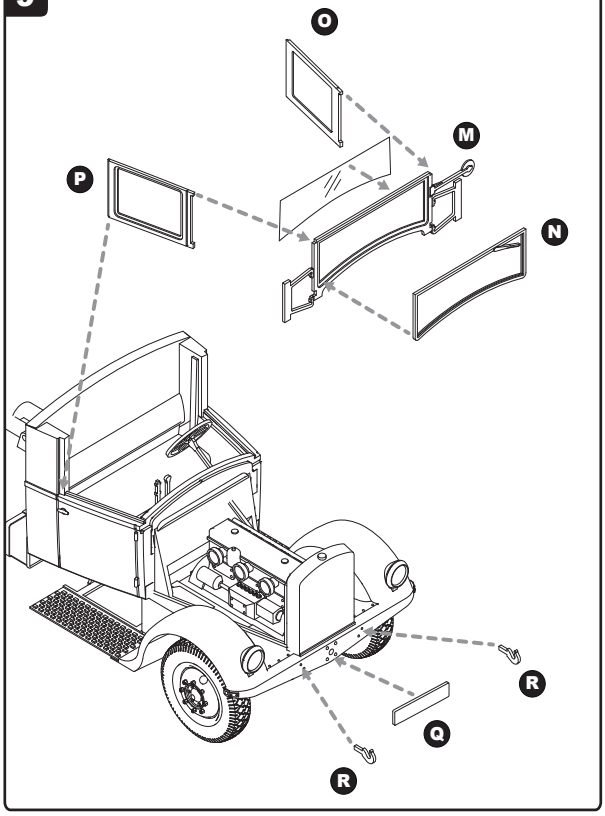

10

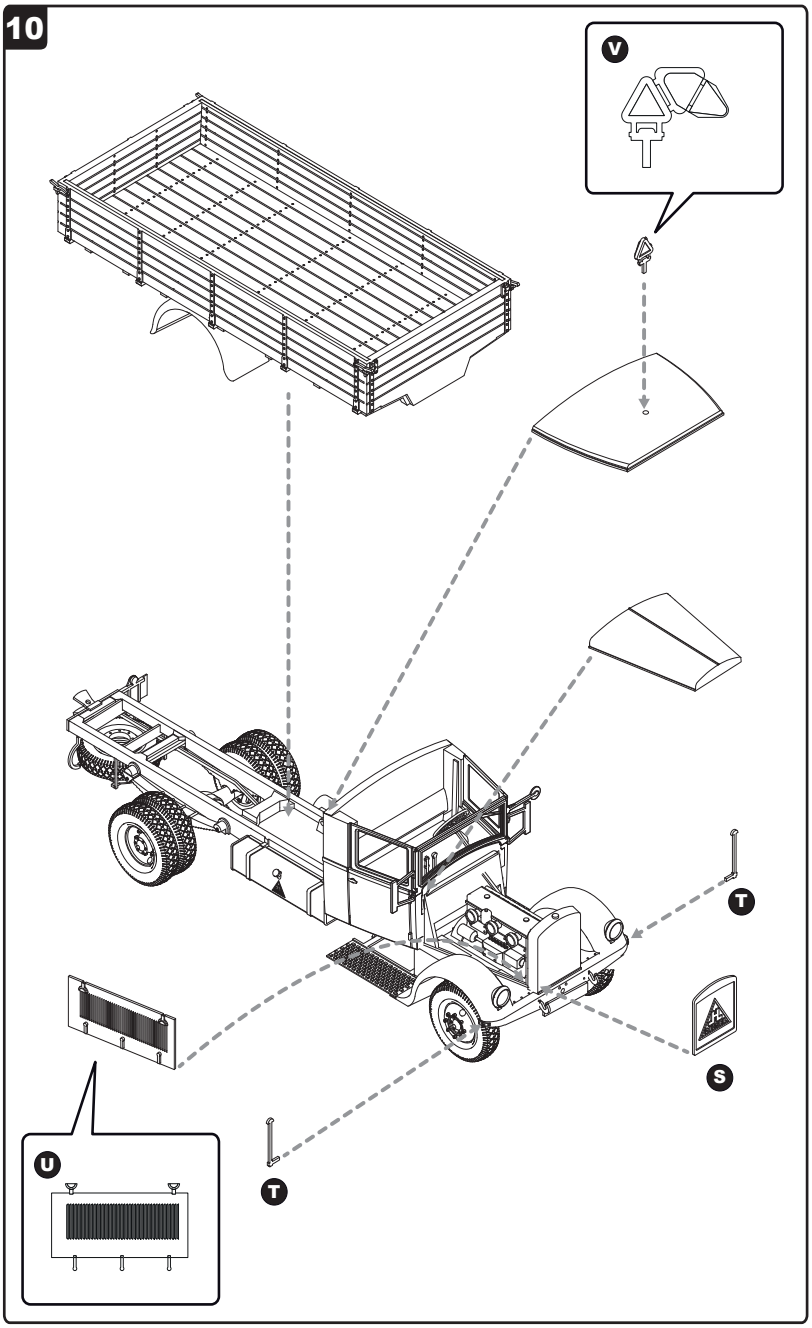
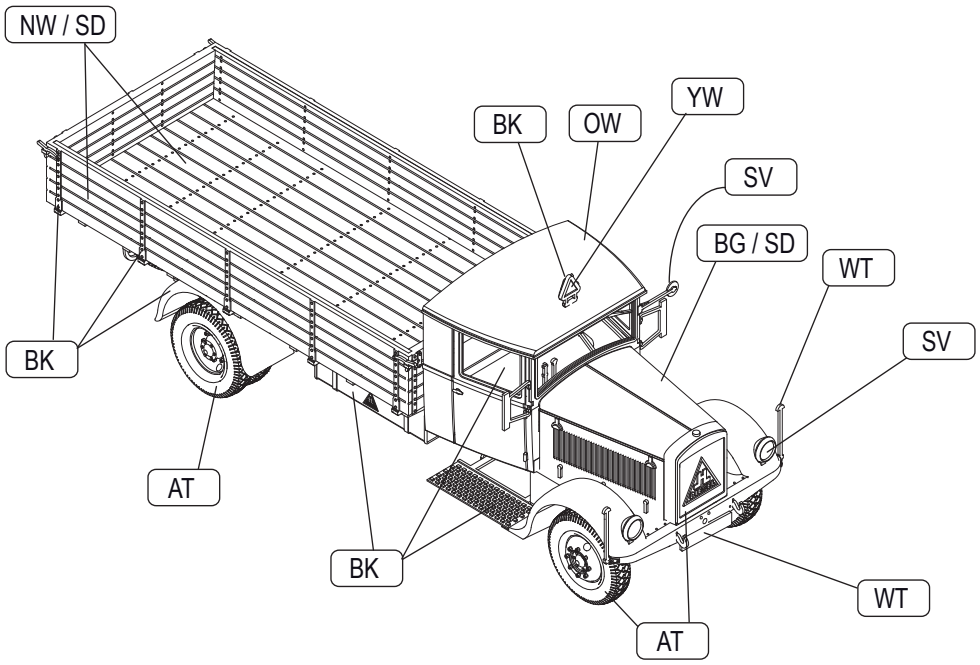
11